东莞市地安电子科技有限公司
DONGGUAN CITY DIERAN ELECTRONICS CO.,LTD

REVISION RECORD				
REV.	DESCRIPTION	ECN NO.	APPROVED	DATE

10.00*N-3.5(N为位数)

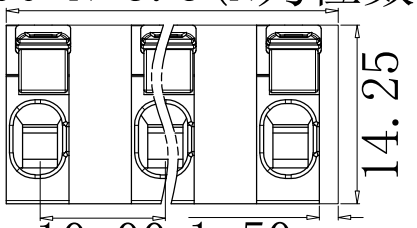

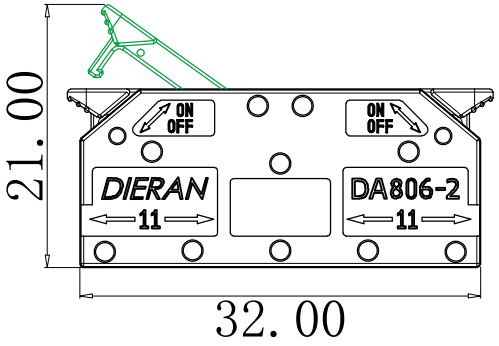

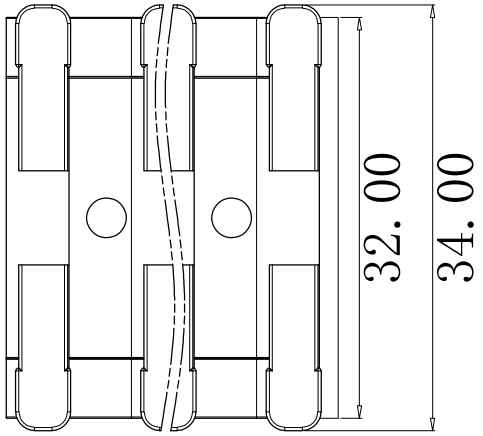

项目/参数/认证	TÜV	CE
额定电压(Rated Voltage) [V]	450	450
额定电流(Rated Current) [A]	32	32
额定线经平方(Wire Range) [mm²]	0.34-4.0	0.34-4.0
额定线经线号(Wire Range) [AWG]	22-12	22-12
冲击电压 (Impulse withstand voltage)	4(KV)	
剥线长度(Stripping Length) [mm]	10-11(mm)	
绝缘材料(Insulation Material)	PA66 UL94V-0	
导体材料(Contactor Material)	红铜(Red brass)	
导体表面镀层(Contactive Coating)	无镀层 (Unplated)	
间距(Pitch) [mm]	5.0	
级数(Poles) [P]	2-32P	
工作温度(Operating temperatur)[℃]	-40℃～+105℃	

linear dimension (Tolerances Standard GB/T 14486-2008)								—	▱	⊥	
variable range	to 6	over 6 to 10	over 10 to 30	over 30 to 60	over 60 to 100	over 100 to 160	over 160 to	to 10	over 10 to 100	over 100 to
tolerance	±0.20	±0.30	±0.50	±0.70	±1.00	±1.30	±1.60	0.10	0.30	0.60

单位/UNITS	mm	尺寸/SIZE	A4	比例/SCALE	1:1	第三视角/THIRD ANGLE PROJECTION	版本/REV	V0
东莞市地安电子科技有限公司						名称/TITLE	DA806-2-5.0 带固定	