东莞市地安电子科技有限公司
DONGGUAN CITY DIERAN ELECTRONICS CO.,LTD

REVISION RECORD				
REV.	DESCRIPTION	ECN NO.	APPROVED	DATE

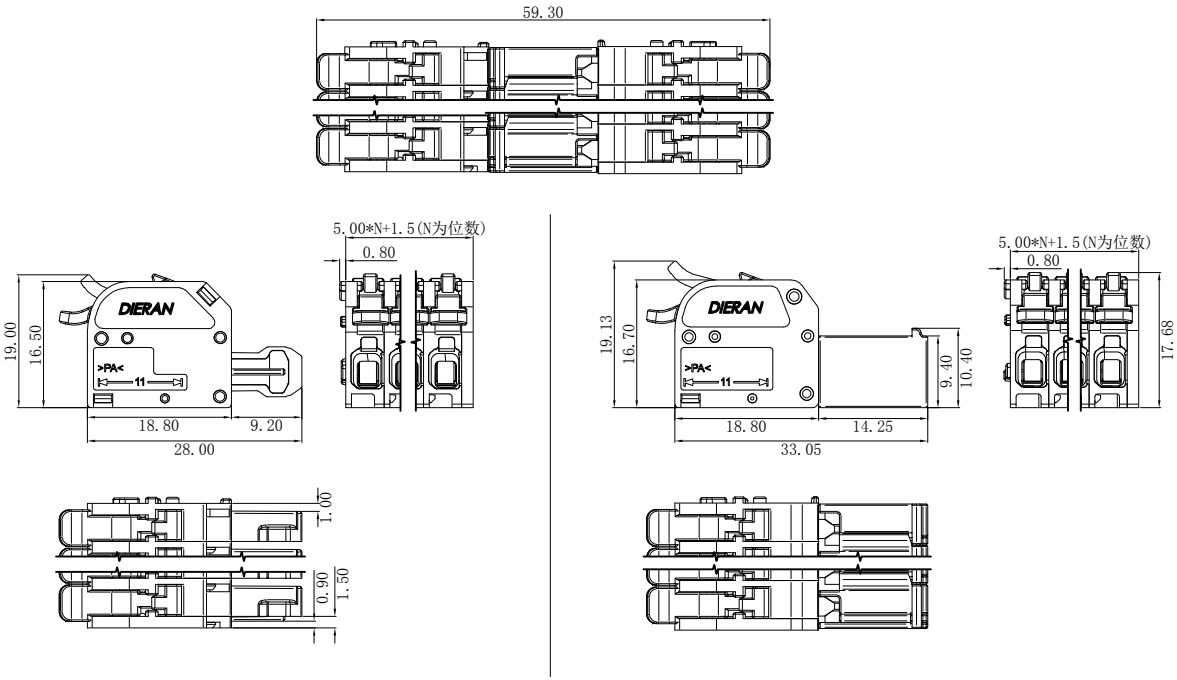

项目/参数/认证	
额定电压(Rated Voltage) [V]	320
额定电流(Rated Current) [A]	18
额定线经平方(Wire Range) [mm²]	0.34-4.0
额定线经线号(Wire Range) [AWG]	20-12
冲击电压 (Impulse withstand voltage)	4(KV)
剥线长度(Stripping Length) [mm]	10-11(mm)
绝缘材料(Insulation Material)	PA66 UL94V-0
导体材料(Contactor Material)	铜(cooper)
导体表面镀层(Contactive Coating)	镀锡 (Dumb tin)
间距(Pitch) [mm]	5.0
级数(Poles) [P]	2-12P
工作温度(Operating temperatur)[℃]	-40℃～+85℃

linear dimension (Tolerances Standard GB/T 14486-2008)									—	▱	⊥
variable range	to 6	over 6 to 10	over 10 to 30	over 30 to 60	over 60 to 100	over 100 to 160	over 160 to	to 10	over 10 to 100	over 100 to
tolerance	±0.20	±0.30	±0.50	±0.70	±1.00	±1.30	±1.60	0.10	0.30	0.60

单位/UNITS	mm	尺寸/SIZE	A4	比例/SCALE	1:1	第三视角/THIRD ANGLE PROJECTION	版本/REV	V0
东莞市地安电子科技有限公司						名称/TITLE	DA606-3	